FLEXSTAR

UNDERCANOPY 120W LED

USER MANUAL



UNDERCANOPY 120W LED

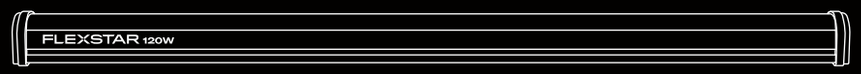

Intertek
4009588

1. PRODUCT CONTENTS

Warning! Please read the following information carefully before installing and using.

1. Check and comply with your local law and restrictions for additional safety requirements of installation and operation.
2. Make sure your AC power source conforms to the electrical requirement of this light.
3. This light is suitable for operation in ambient not exceeding 95°F/40°C.
4. DO NOT use the devices in this kit in outside area or any hazardous locations such as places near flammable, explosive, corrosive chemicals or wet environment.
5. DO NOT open or disassemble the LED fixture. Opening or modifying the LED fixture without permission may be dangerous and will void the warranty immediately.
6. This product may cause interference to radio equipment and should not be installed near the navigation or communication equipment operating between 0.45-30MHz. DO NOT install this light fixture near the maritime communication devices.
7. DO NOT use the LED fixture if the light fixture or power cord is damaged. Replace the power cord only with a certified cord.
8. Modification to the power cord may lead to electromagnetic interference. It will void the warranty and nullify any compliance of legal regulations.
9. Cut off the power of the light before installing and maintenance.
10. DO NOT spray on the light directly or use sulfur vaporizers.
11. DO NOT touch the light fixture when it is operating.
12. DO NOT look straight at the LED grow light. Wear an appropriate glasses when the light is working.
13. The installation and operation of this light are the resposibility of the end user. Incorrect installation or operation may cause malfunction of the light and will void the warranty.

2. KEY FEATURES

- 120W 4ft LED linear light with high PPE efficacy
- Under canopy lighting for higher yield
- Compatible for downward lighting setup
- Seamless end to end connection with up to 20 lights
- Scatter light output for better uniformity and penetration
- 0-10V dimming with RJ11 connection, compatible with controller
- IP66 water proof and dust proof
- ETL, DLC, CE, FCC certified
- Simple and fast to install
- 5-year warranty

3. PRODUCT CONTENTS

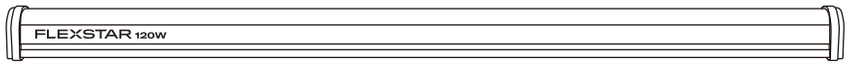

120W Undercanopy LED light (1 pc)

4. PRODUCT INFORMATION

4.1 SPECTRUM

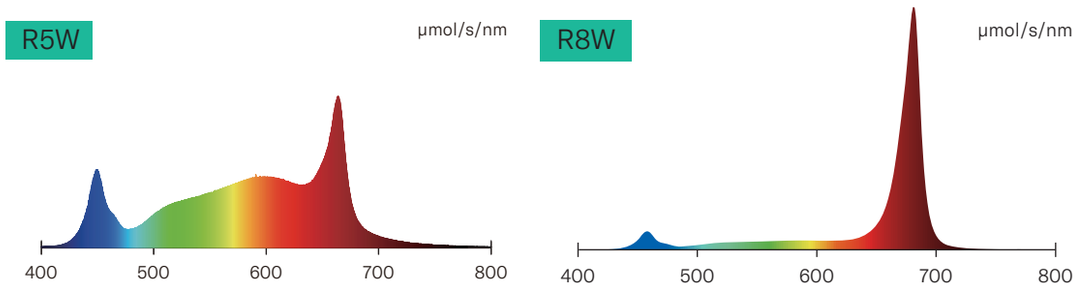

4.2 TECHNICAL SPECIFICATIONS

Model	**UCL 120W**	Weight	**5.73lb / 2.6kg**
PPE (μmol/J)	**up to 3.3**	Thermal Management	**Passive**
PPF (μmol/s)	**Up to 400**	Operation Temperature	**95°F/35°C Max**
Input Power	**120W**	Light Distribution	**120°**
Input Voltage	**120-277V**	Daisy-Chain	**Up to 20 lights**
Input Current	**1.0A-0.5A**	Dimming	**25%-100%/OFF**
Frequency	**50/60HZ**	Lifetime	**>50000hrs**
Fixture Dimensions	**46.06”L x 3.27”W x 2.76”H 1170 x 83 x 70mm**	Warranty	**5 year**

4.3 DIMENSIONS

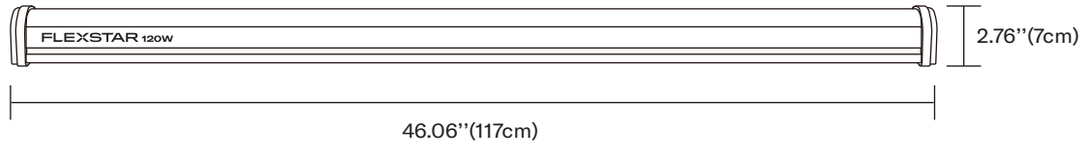

5. INSTALLATION

Please read the follow information before starting to install. Installation of this horticulture LED light shall be performed by qualified person with experience.

To mount the light fixture properly, start by identifying an appropriate support structure for the fixture to mount on. Ensure the structure can hold the whole weight of the light fixture and stable during installing and operating. Be careful when unboxing, moving and installing the light.

There are 2 options to mount the light fixture suitable for different applications:
Under Canopy Mounting: Lighting upward, providing supplemental light to the branches of plants under canopy;
Above Canopy Mounting: Lighting downward, providing light on the plant canopy.

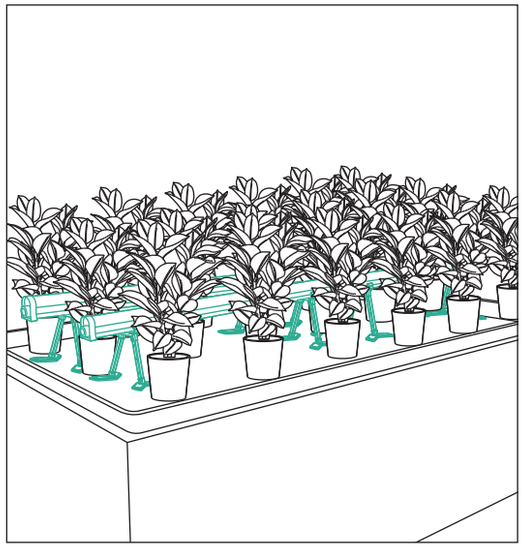

Under Canopy Mounting

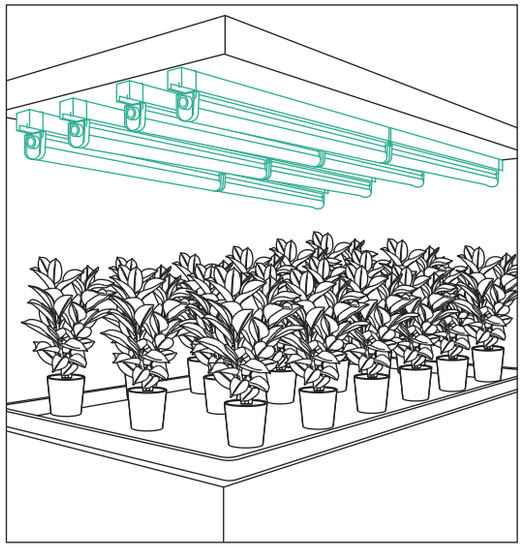

Above Canopy Mounting

Please check the maximum number of the lights connected to the same AC outlet (showed as below) before starting to install.

	120Vac	240Vac	277Vac
Current per fixture	1.0A	0.5A	0.43A
Max. number of lights connected	9	17	20

5.1 UNDER CANOPY INSTALLATION

Choose an appropriate position with a flat surface for setting up the lights. Use buckets (not included) or stands (sold separately) as the base to put the lights on. Ensure the base is solid. Use clips (sold separately) to mount on the square tubing.

Bucket Base

Prepare the enough amount of buckets or container pots with appropriate size. Put the bucket or container pots upside down on the connection position of light with 4 feet distance in a straight line. Ensure the lights and connection position are held stably when following the steps in 5.3 to connect multiple lights.

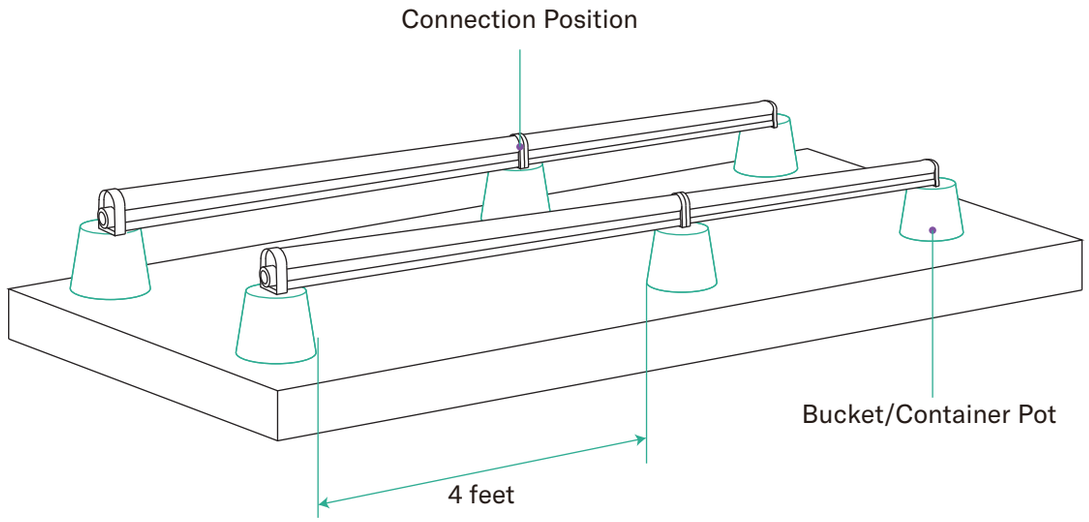

Support With Stands

Clip the two stands onto one light as the diagram showed below. Adjust the stands' position about 8"-12" from the ends of each light to hold the light stably. Follow the steps in 5.3 to connect the multiple lights.

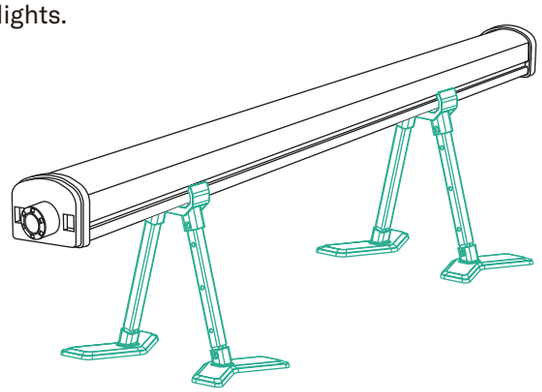

Mounting on Square Tubing

Prepare the square tubing and adjust to an appropriate height. Ensure the tubing is fixed. Screw or tie the two clips for each light on the squre tubing. The clips should be fixed with about 8"-12" from where the ends of each light will be located. Follow the steps in 5.3 to connect the multiple lights.

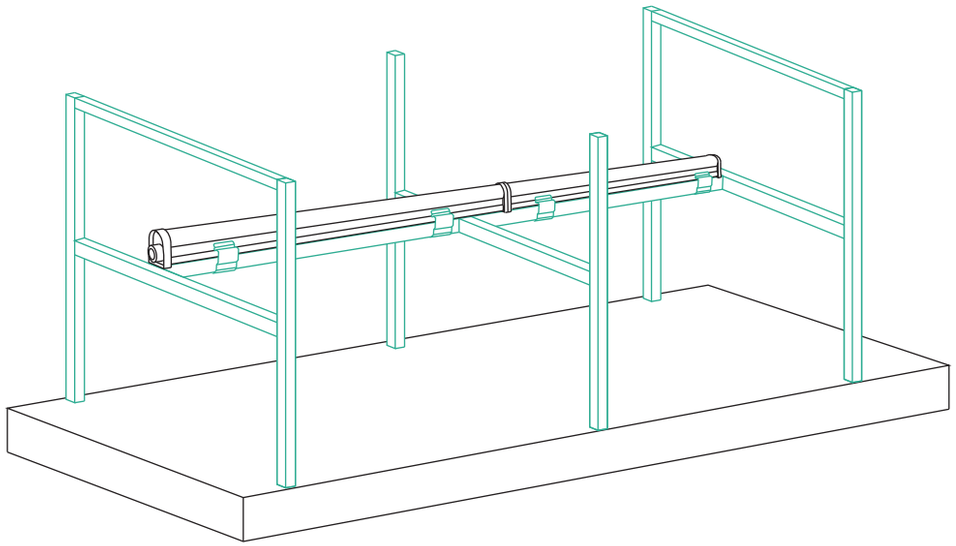

5.2 ABOVE CANOPY INSTALLATION

For the application of downward lighting above the canopy, it needs to be mounted with clips.

Mounting With Clips

Firstly, screw or tie the clips (sold separately) onto the bracket, ceiling or rack. Then push the light into the clips and following the steps in 5.3 to connect multiple lights.

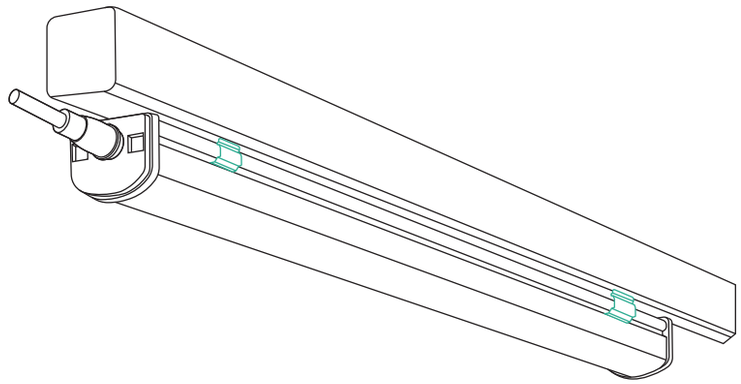

5.3 LIGHT CONNECTION

(1) Set the first light at a proper position following the steps in 5.1 or 5.2. Ensure the male ports of the lights face outside to connect to the power cord later.

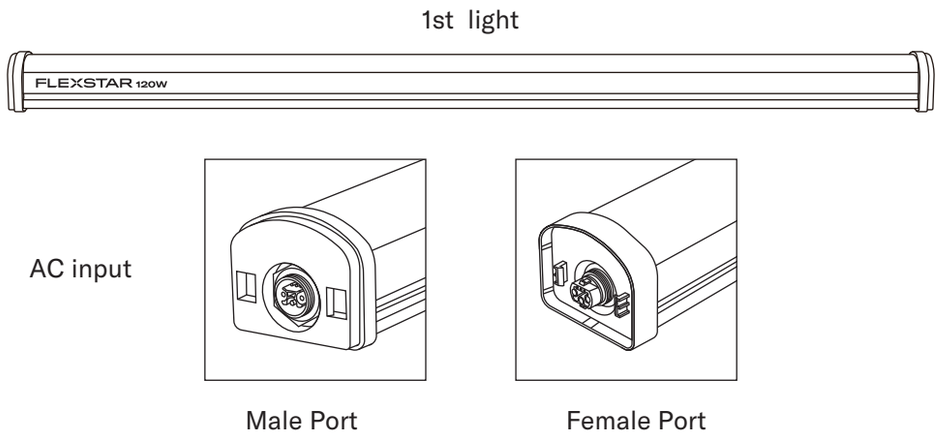

(2) Connect the 2nd light to the 1st light by plug the male port of the 2nd light into the female port of the 1st light (seamless connection). Ensure the connecting is tight. Or use an extension cord (sold separately) to connect between the lights if needed.

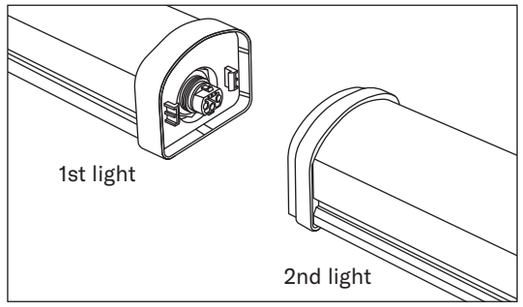

Seamless connection

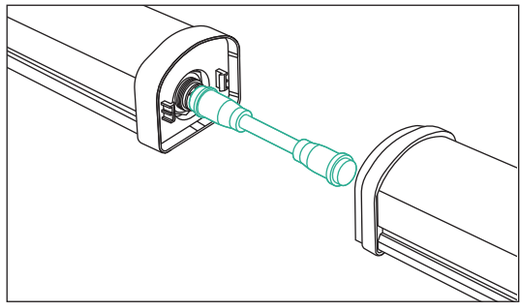

Extension Cord Connection

(3) Repeat Step 2 to connect remaining lights. Keep the whole line of lights straight if use the seamless connection.
Note: Ensure the numbers of light connected is not exceed the maximum number of daisy chain under certain input AC input voltage.



First Light Last Light

(4) Use the extension cord to connect between different lines of lights if needed. Ensure the male and female connectors into the right port of lights.
Note: Ensure the numbers of light connected is not exceed the maximum number of daisy chain under certain input AC input voltage.



First Light

Last Light

(5) Plug the end cap into the female port of the last light. Ensure the connection is tight.

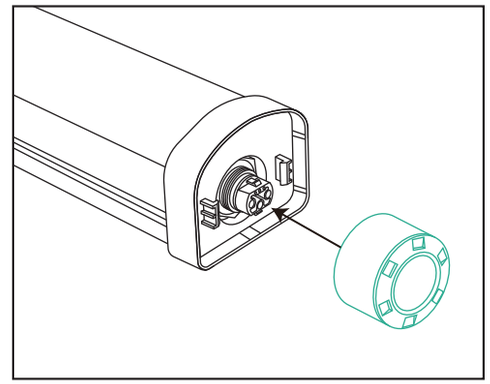

(6) Plug the power cord with RJ11 cable into the male port of the 1st light. Screw the cap to tighten the connection.

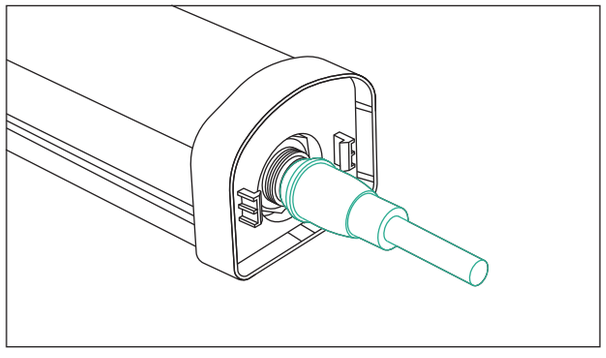

(7) Plug the RJ11 cable to the RJ11 end connector or a compatible controller.
Note: If the RJ11 end connector or a compatible controller is not connected, the light will not be turned on normally!

ZEUS X2 Smart Controller

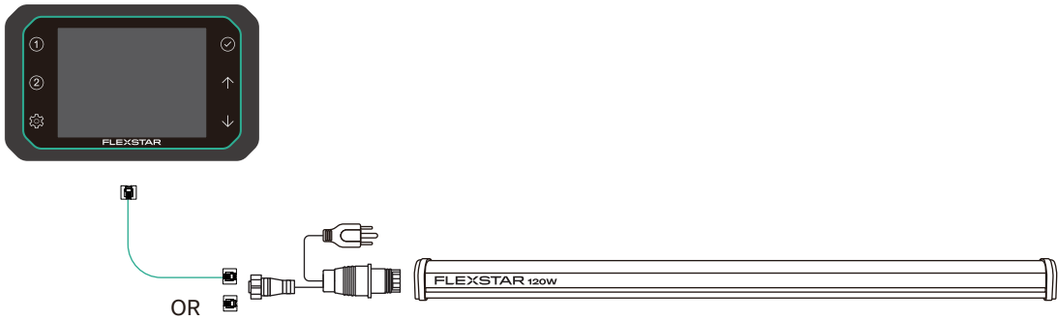

5.4 CONTROL CONNECTION

Up to 160 pcs of the Flexstar Undercanopy 120W LED lights can be connected with daisy-chain and controlled by a Flexstar ZEUS Controller (sold seperately).

- Following the instructions in 5.3 to connect all the lights in each line (connect to the same AC outlet). The max. number of light in each line is 20 pcs (@277Vac input);
- Plug the RJ11 cable of the first light of the first line to the single-port of a cable splitter (sold separately);
- Repeat the process to connect all of the light lines to cable splitters. The max. number of lights in all the lines is 80;
- Use extra RJ11 cables (sold separately) to connect adjacent cable splitters as the diagram below shows;
- Connect the cable splitter of the first light line to one of the channels of 0-10V controller. Repeat the above process to connect another 80 lights to the other channel of controller (if have).

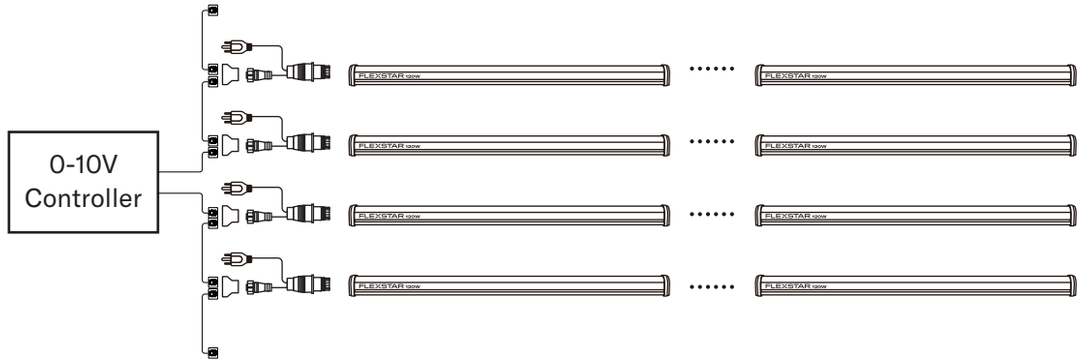

* Max. Number of Daisy-Chain Lights (Control) 80 pcs. per channel

5.5 CONNECTING THE LED FIXTURES TO THE MAINS

- Ensure the input power is off before connecting.
- Plug the power cords of each light line into nearby AC outlets of the Mains according to the local rules, safety regulations and electrical codes.
- Ensure the power cords is not coild or touching any hot surfaces.
- Ensure the inrush current of the light is in the tolerance of the externel switch. DO NOT use household timers on this light.
- Turn on the mains power and check the light.

6. OTHER INFORMATION

Maintenance

- Turn off the power and allow the light to cool down before starting to clean.
- Check the LED light regularly for dust or dirt buildup. Clean with a damp soft cloth if needed. Contamination may cause overheating and decreasing of the performance.
- DO NOT use any chemical detergents to clean.
- DO NOT spray the water on the light fixture or use water mist to clean.
- Check the connection of lights after every maintenance.

Storage And Disposal

- Store this product in a dry and clean environment with an ambient temperature of 4~185°F/ -20~85°C.
- DO NOT dispose this product as a standard waste. It is to be collected or brought to a recycling center for proper disposal and environmental treatment.

7. WARRANTY

The company warrants the mechanical and electronic components of this product and guarantees the materials and workmanship free of defects if used under normal operating conditions, for a period of five (5) years from the original date of the purchase.

If you find that there are any defects with this product that relate to either the workmanship or the materials but are not due to improper use or user error, the company shall, at its discretion, either replace or repair the product using the appropriate new or reconditioned parts. In the case that the company decides to replace the entire product , the date of the limited warranty shall apply to the replacement from the date of the purchase of the initial product for five (5) years.